DELL R630
Xeon E5-2699v3

Internal Options:

- CPU 2699v3 18-Core EM64T — I-E5-2699v3: 2nd 18-Core E5-2699v3 45MB 2300MHz 145W
- 8GB — MEM-8GB: Memory 1x DIMMs each
- 16G — MEM-16GB
- 32G — MEM-32GB
- Power Supply — POWER-2: 2nd Power 750W
- 300GB 15k SAS — HDD-300GB: 300GB 10k SAS 2.5"
- 600GB 10k SAS — HDD-600GB: 600GB 10k SAS 2.5"
- 1200GB 10k SAS — HDD-1200GB: 1200GB 10k SAS 2.5"
- 200GB SSD SLC SAS — SSD-200GB: 200GB SSD SAS 2.5"
- 800GB SSD SLC SAS — SSD-800GB: 800GB SSD SAS 2.5"
- SATA DVD R/W — DVD-SATA: SATA CD-RW/DVD
- Ethernet 1GbE HBA 4-ch PCI — PCI-1GbE: HBA 4x 1GbE
- Ethernet 10GE HBA 2-ch PCI — PCI-10GbE: HBA 2x 10GbE
- FC 8Gb HBA 2-ch PCI — PCI-FC8: HBA 2x FC8
- RAID SAS HBA 8-ch PCI — PCI-RAID: HBA SAS RAID

Example Configuration x86-64

Intel Xeon E5-2699v3 x86-64
2300MHz 2P 18-Core DELL-R630-A

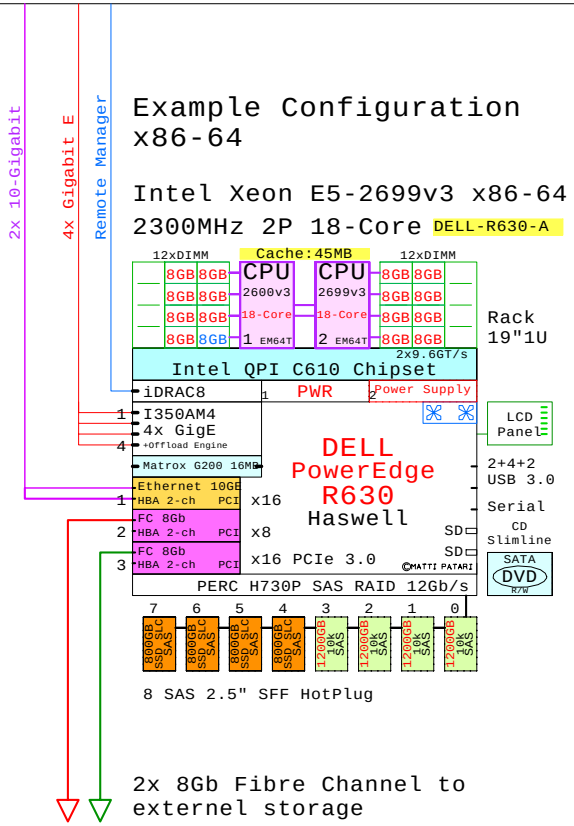

Haswell
2300MHz 18-Core

Intel Xeon E5-2699v3 x86-64
2300MHz 2P 18-Core DELL-R630-A

Max Memory 24x 32GB= 768GB

2nd processor
2300MHz 145W
Cache 45MB

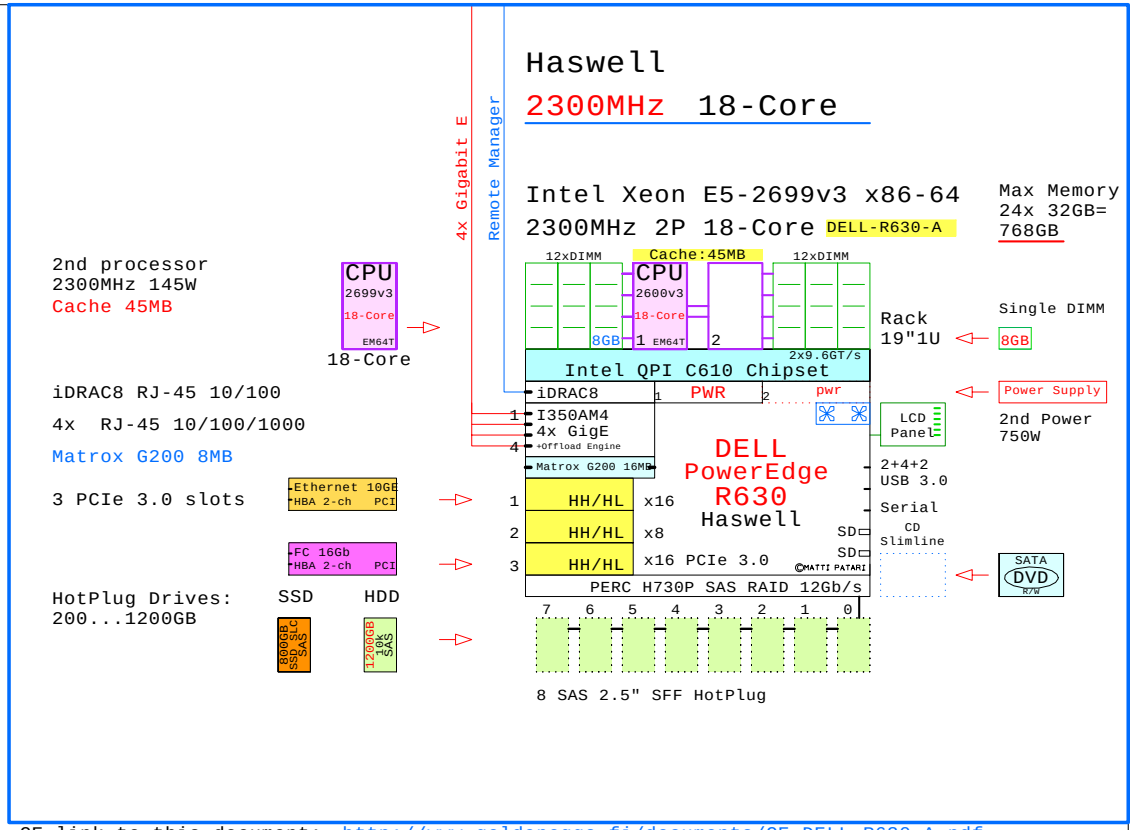

iDRAC8 RJ-45 10/100

4x RJ-45 10/100/1000

Matrox G200 8MB

3 PCIe 3.0 slots

HotPlug Drives:
200...1200GB

SSD HDD

GE-link to this document: http://www.goldeneggs.fi/documents/GE-DELL-R630-A.pdf

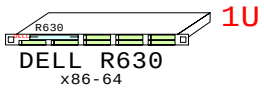

Parts list for the 2P 2x18-Core Dell R630 1U

Part Number	Qty	Description
DELL-R630-A	1	DELL R630 2P 18C E5-2699v3 45MB 8GB 1U
DVD-SATA	1	DVD SATA Slimline
HDD-1200GB	4	Disk HDD 1200GB 2.5" SAS 10k hot-plug
I-E5-2699v3	1	Intel Xeon E5-2699-v3 18-Core 2.3GHz 45M
MEM-8GB	15	Memory 1x 8GB DIMM
PCI-10GbE	1	Ethernet 2x 10GbE PCI HBA
PCI-FC8	2	Fibre Channel 8Gb 2-ch PCI HBA
POWER-2	1	Additional power supply hot-plug
SSD-800GB	4	Disk SSD 800GB 2.5" SAS SLC hot-plug

MS Windows Server 2008
LINUX: Red Hat, SuSE

Golden Eggs Home:
http://www.goldeneggs.fi

© 2014 Matti Patari, All rights reserved.

Made by:
Matti.Patari@Kolumbus.FI

DELL PE R630 Intel E5-2699v3 2P/1U

GOLDEN EGGS Visuals ™ Helsinki	01-Nov-2014	GE-DELL-R630-A
	Matti.Patari@Kolumbus.fi	

DELL PE R630 2P/1U E5-2699v3 2.3G
GOLDEN EGGS Visuals, Helsinki

First rev 01-Nov-2014

Welcome to GoldenEggs x86 Visual Configurations

http://www.goldeneggs.fi

A picture is worth of one thousand words.
It talks all languages.

x86-64 servers: Dell IBM HP Fujitsu SUN Acer Lenovo and Cisco

4x Gigabit E

Remote Manager

Intel Xeon E5-2699v3 x86-64
2300MHz 2P 18-Core DELL-R730-A

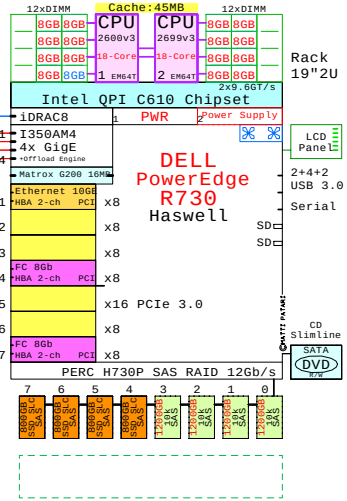

Intel Xeon E5-2680 x86-64
2700MHz 2P 8-Core IBM-7914-L2x

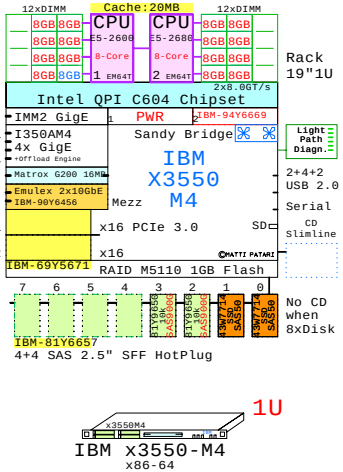

AMD Opteron 6172 x86-64
2100MHz 2P 12-Cor 573088-421 EU

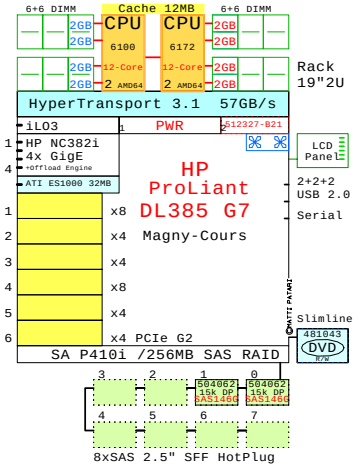

Dell Blades

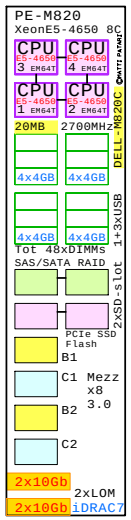

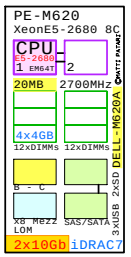

Fujitsu

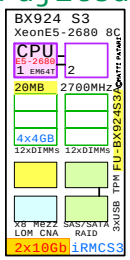

HP Blades

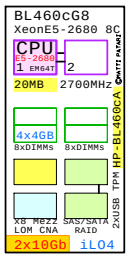

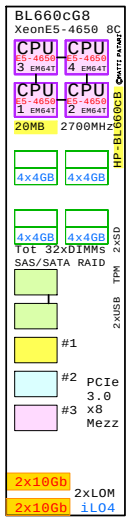

IBM Blades

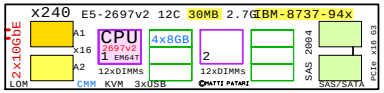

Cisco Blades

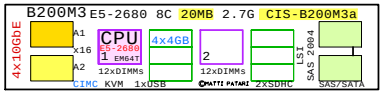

Donate GoTo PayPal at:
www.GoldenEggs.fi

This x86 site is open, vendor independent.
It is fully funded from my own pocket.
To keep this service running,
Your personal support is welcome.

Matti.Patari@Kolumbus.fi
Helsinki Finland

GE-links to x86 COMPARE Pictures:

New http://www.goldeneggs.fi/documents/GE-COMP-E52600V3-A.pdf

http://www.goldeneggs.fi/documents/GE-COMP-E74800V2-A.pdf

http://www.goldeneggs.fi/documents/GE-COMPARE-BLADE-A.pdf

http://www.goldeneggs.fi/documents/GE-INT-E5-MAP-A.pdf

Follow GoldenEggs on Twitter:
@goldeneggsfi

Older GoldenEggs sites:

http://h18000.www1.hp.com/info/GECPQA/

http://www.openvms.org/pages.php?page=GoldenEggs

GE-link to GE 25 Year-Book

http://www.goldeneggs.fi/documents/GE-25-YEAR-BOOK.pdf

©2014 Matti Patari, All rights reserved.

GOLDEN EGGS Visuals ™ Helsinki	14-Oct-2014	GE-Welcome1
	Matti.Patari@Kolumbus.Fi	

Welcome to Visual Configurations
GOLDEN EGGS Visuals, Helsinki

GE-Welcome1

First rev 18-Apr-10